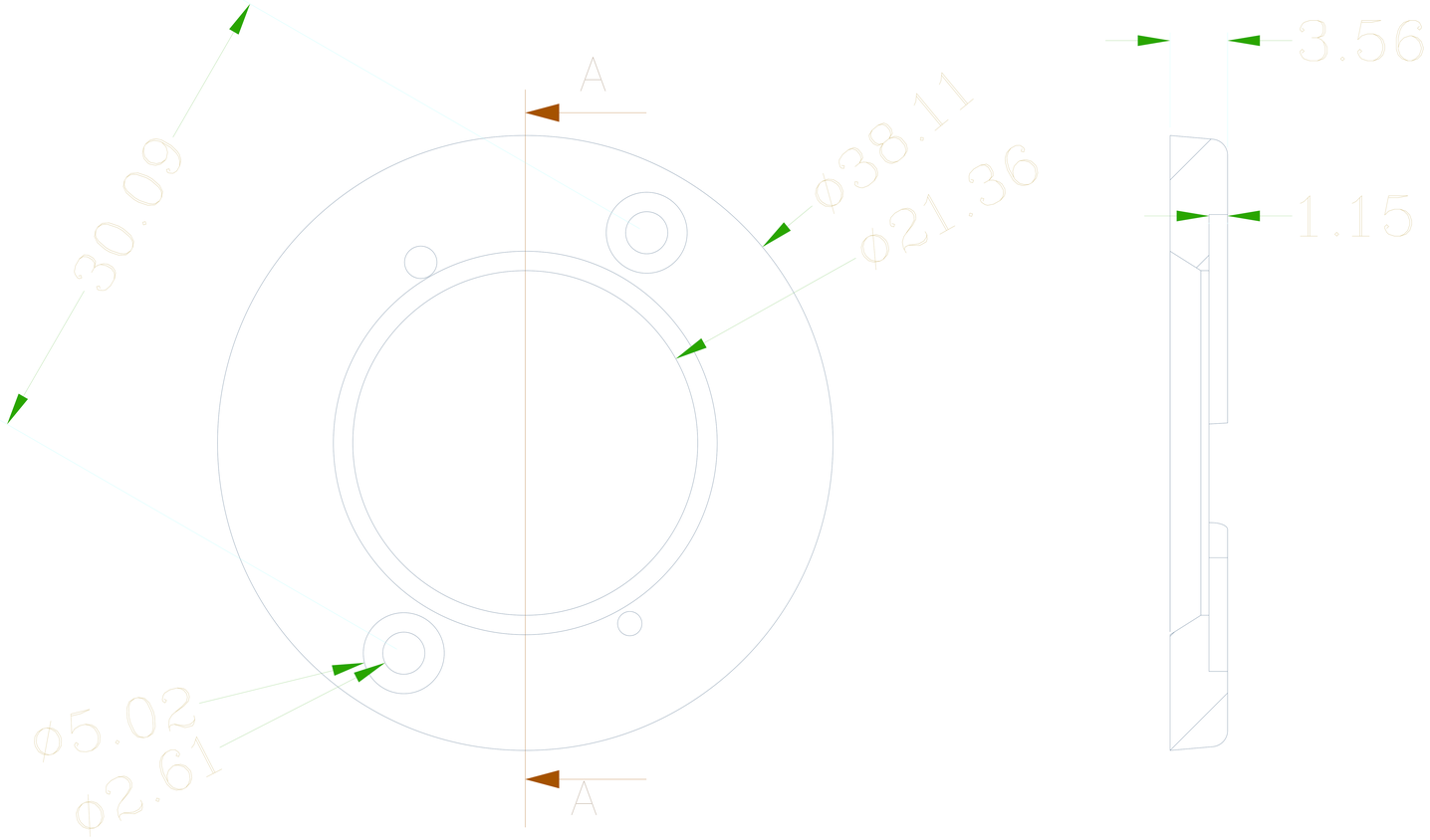
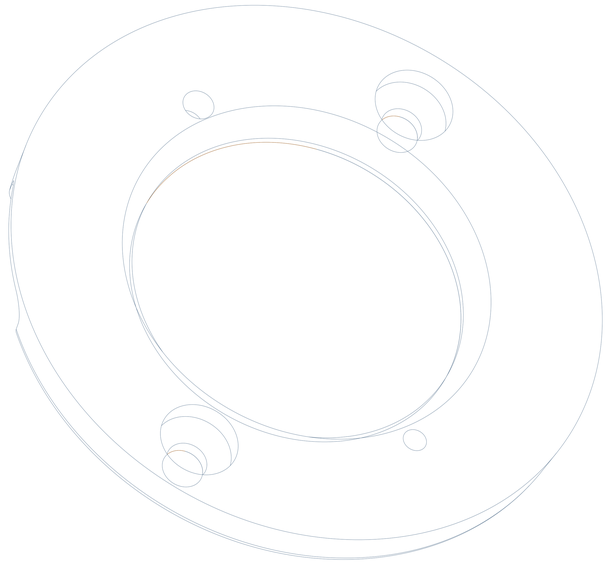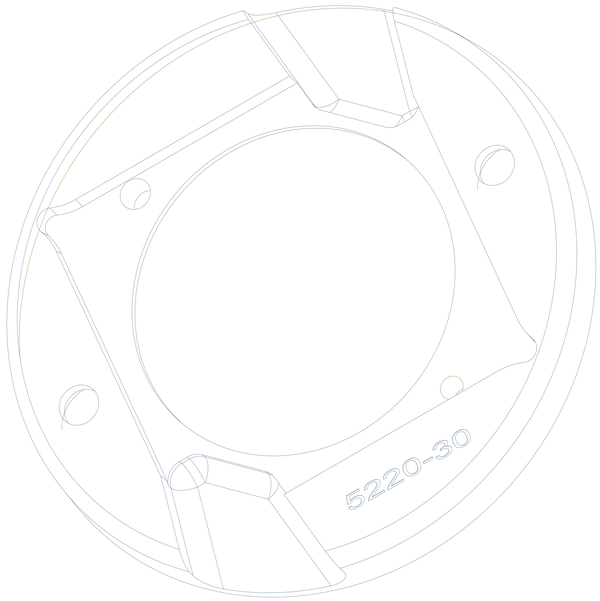
SECTION A—A